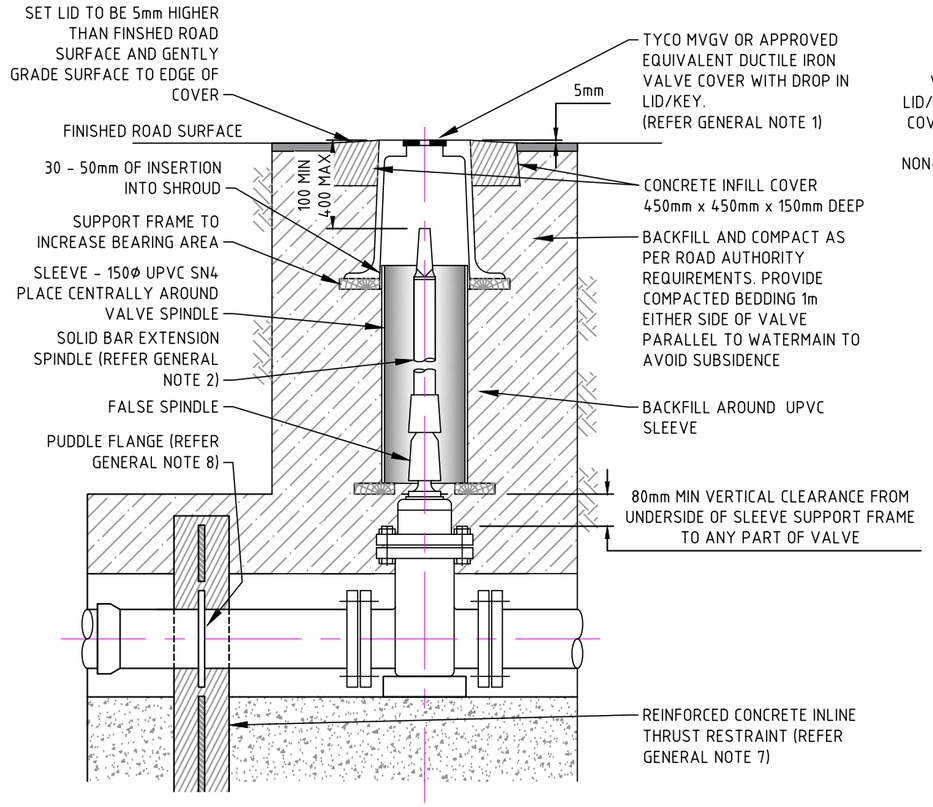

SECTION A–A SPINDLE PROTECTION SLUICE VALVES IN ROAD

NOT TO SCALE

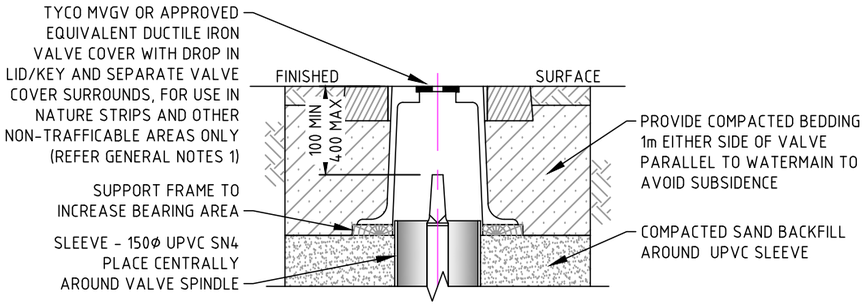

PART SECTION A–A SPINDLE PROTECTION FOR SLUICE VALVES IN NATURE STRIP

NOT TO SCALE

GENERAL NOTES

USE DUCTILE/CAST IRON VALVE COVERS IN ALL SITUATIONS. PLASTIC VALVE COVER SURROUNDS WITH AN INTEGRATED DUCTILE DROP IN LID KEY ARE NOT PERMITTED FOR USE IN ANY CIRCUMSTANCE.

1. SOLID BAR EXTENSION SPINDLE OF SUITABLE LENGTH IS TO BE FITTED. WHERE MULTIPLE EXTENSION SPINDLES ARE REQUIRED, THE MINIMUM POSSIBLE NUMBER MUST BE USED.
2. REFILL MATERIAL MUST BE COMPACTED TO ENSURE NO SUBSIDENCE OF VALVE COVER.
3. WATERMAIN DEPTH MAY REQUIRE DEEPENING FOR THE INSTALLATION OF VALVES.
4. THE CONTRACTOR MAY RE-USE VALVE COVERS IF PROVEN TO BE IN GOOD CONDITION.
5. WHERE VALVE IS INSTALLED IN FOOTPATH ENSURE IT IS FLUSH WITH FINISHED SURFACE SO IT DOES NOT CREATE A TRIP HAZARD.
6. ALL FLANGED JOINTS TO BE PROTECTED WITH DENSO PETROLATUM TAPE SYSTEM.
7. REINFORCED CONCRETE INLINE THRUST RESTRAINT TO BE DESIGNED AND CONSTRUCTED AS PER STD WRMA-W-205A, WRMA-W-205B AND WRMA-W-205C.
8. PUDDLE FLANGE TO BE DESIGNED AND CONSTRUCTED AS PER STD WRMA-W-306A&B.

VALVE PURPOSE	COLOUR	
CONTROL VALVE - NORMALLY OPEN	UNPAINTED OR WHITE	○
INTERCONNECTION VALVE (HIGH/LOW LEVEL) - NORMALLY CLOSED	YELLOW	
RECYCLED WATER VALVE	LILAC	
BOOSTED SYSTEM - CLOSED	BLUE	
DIALYSIS	ORANGE	
SCOUR VALVE - NORMALLY CLOSED	RED	
INTERCONNECTION VALVE (STORAGE) - NORMALLY CLOSED	GREEN	
CLOCKWISE CLOSING VALVE (OPPOSITE TO NORMAL)	PINK	

STANDARD VALVE COVER COLOURS (APPLICABLE 2013 ONWARDS)

COVERS TO BE PAINTED BY WANNON WATER STAFF ONLY UPON COMPLETION OF WORKS

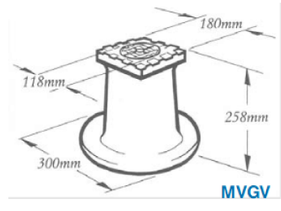

TYPICAL COVER DIMENSIONS

NOT TO SCALE

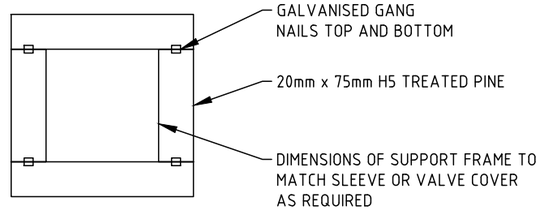

PVC & DI COVER SUPPORT FRAME

NOT TO SCALE

No.	Revision	Drawn	Checked	Approved	Date
5	DRAWING UPDATED	M.W	WW ESC	WW ESC	18/02/2026
4	DRAFTING TRANSFERRED TO NEW TEMPLATE	P.M.	G.D.		19.09.24
3	DRAWING UPDATED	A.S.			13.09.17

wannonWATER
Wannon Region Water Corporation
PO Box 1158, Warrnambool VIC 3280
Ph. 1300 926 666
Fax. (03) 5564 7650
Email@Wannonwater.com.au
www.wannonwater.com.au

This Drawing must not be used for Construction unless signed as 'Approved'

Note: * indicates signatures on original issue of drawing or last revision of drawing

Designed: WW Eng Standard Committee
Drawn: M.Wyss
Checked: WW Eng Standard Committee
Approved: WW Eng Standard Committee
Date: 18/02/2026

Wannon Water

Project: STANDARD DRAWING

Drawing Title: SLUICE VALVE INSTALLATION

Original Size: A3 | Scale (At original paper size): 1:n.t.s. | Sheet No: 1 | No. of Sheets: 1

Wannon Water Drawing No: WW-SD-W003